STANLEY FATMAX V20 LITHIUM ION

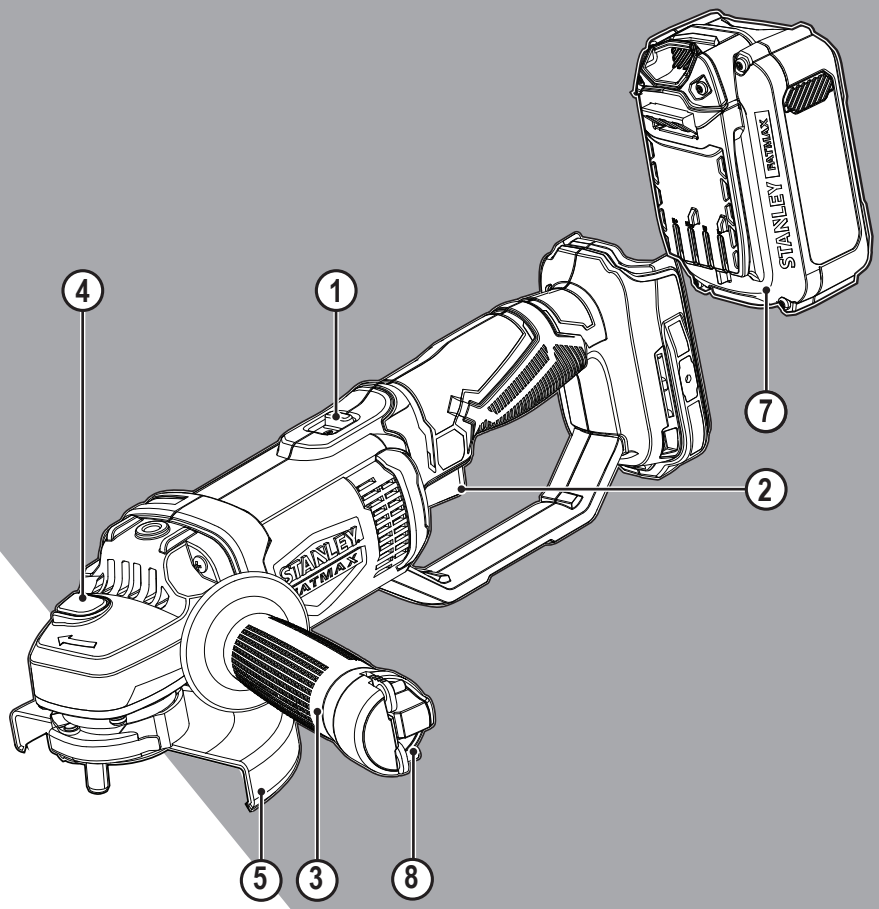

www.stanleytools.eu

SFMCG400

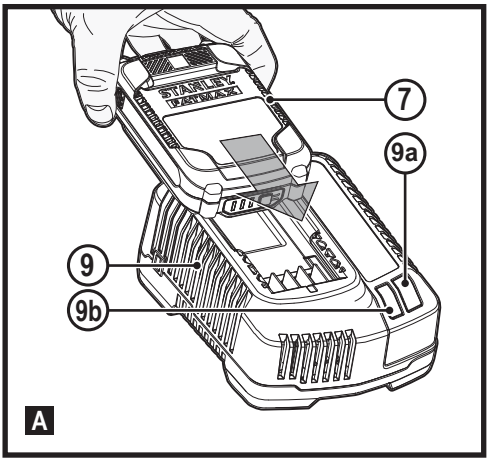
STANLEY
FATMAX
7
9a
9
9b
A

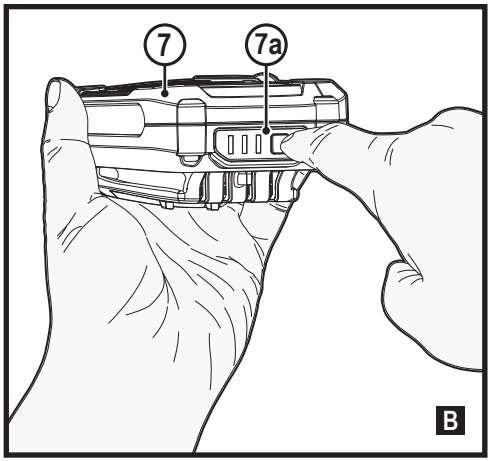
7
7a
B

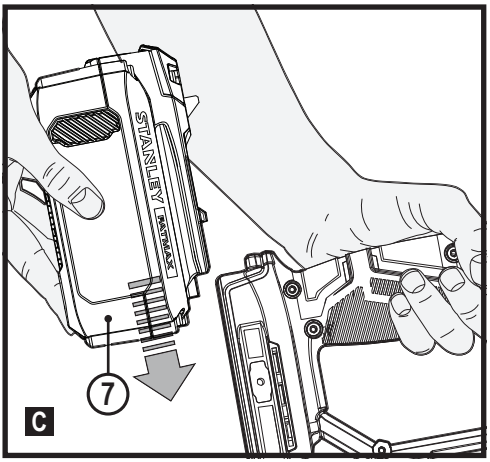
STANLEY
FATMAX
7
C

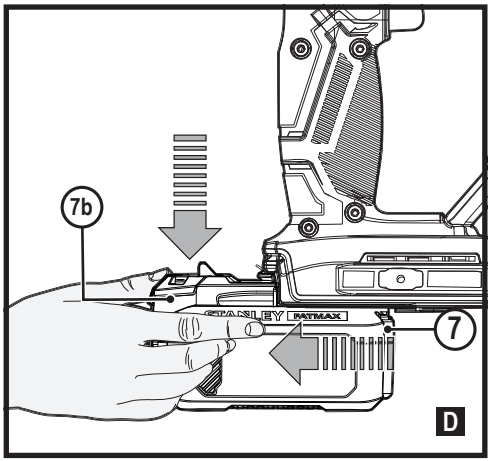
7b
STANLEY
FATMAX
7
D

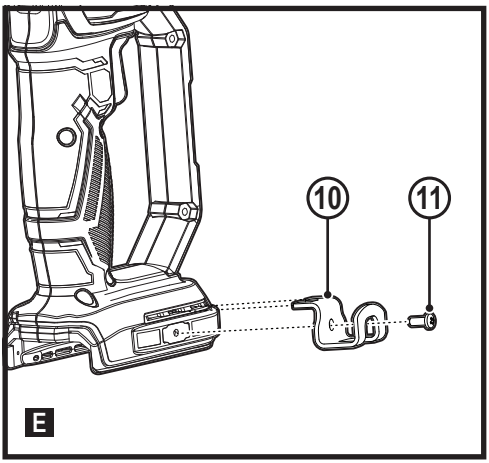
10
11
E

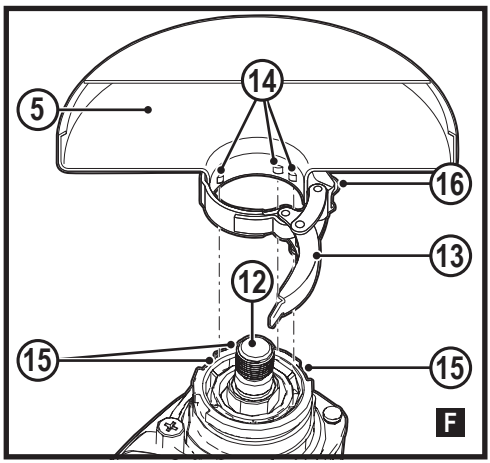
14
5
16
13
12
15
15
F

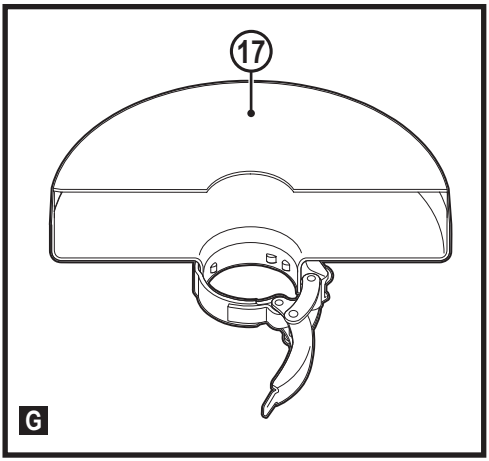

Intended use

Your STANLEY FATMAX SFMCG400 angle grinder has been designed for grinding, cutting and wire brushing metal and masonry using the appropriate type of cutting, grinding and wire brushing disc. The tool must be fitted with the appropriate guard. This tool is intended for professional and private, non professional users.

Safety instructions

General power tool safety warnings

Warning! Read all safety warnings, instructions, illustrations and specifications provided with this power tool. Failure to follow the warnings and instructions listed below may result in electric shock, fire and/or serious injury.

Save all warnings and instructions for future reference. The term "power tool" in all of the warnings listed below refers to your mains operated (corded) power tool or battery operated (cordless) power tool.

1. **Work area safety**

a. **Keep work area clean and well lit.** Cluttered or dark areas invite accidents.

b. **Do not operate power tools in explosive atmospheres, such as in the presence of flammable liquids, gases or dust.** Power tools create sparks which may ignite the dust or fumes.

c. **Keep children and bystanders away while operating a power tool.** Distractions can cause you to lose control.

2. **Electrical safety**

a. **Power tool plugs must match the outlet. Never modify the plug in any way. Do not use any adapter plugs with earthed (grounded) power tools.** Unmodified plugs and matching outlets will reduce risk of electric shock.

b. **Avoid body contact with earthed or grounded surfaces such as pipes, radiators, ranges and refrigerators.** There is an increased risk of electric shock if your body is earthed or grounded.

c. **Do not expose power tools to rain or wet conditions.** Water entering a power tool will increase the risk of electric shock.

d. **Do not abuse the cord. Never use the cord for carrying, pulling or unplugging the power tool. Keep cord away from heat, oil, sharp edges or moving parts.** Damaged or entangled cords increase the risk of electric shock.

e. **When operating a power tool outdoors, use an extension cord suitable for outdoor use.** Use of a cord suitable for outdoor use reduces the risk of electric shock.

f. **If operating a power tool in a damp location is unavoidable, use a residual current device (RCD) protected supply.** Use of an RCD reduces the risk of electric shock.

3. **Personal safety**

a. **Stay alert, watch what you are doing and use common sense when operating a power tool. Do not use a power tool while you are tired or under the influence of drugs, alcohol or medication.** A moment of inattention while operating power tools may result in serious personal injury.

b. **Use personal protective equipment. Always wear eye protection.** Protective equipment such as dust mask, non-skid safety shoes, hard hat, or hearing protection used for appropriate conditions will reduce personal injuries.

c. **Prevent unintentional starting. Ensure the switch is in the off-position before connecting to power source and/or battery pack, picking up or carrying the tool.** Carrying power tools with your finger on the switch or energising power tools that have the switch on invites accidents.

d. **Remove any adjusting key or wrench before turning the power tool on.** A wrench or a key left attached to a rotating part of the power tool may result in personal injury.

e. **Do not overreach. Keep proper footing and balance at all times.** This enables better control of the power tool in unexpected situations.

f. **Dress properly. Do not wear loose clothi ng or jewellery. Keep your hair, clothing and gloves away from moving parts.** Loose clothes, jewellery or long hair can be caught in moving parts.

g. **If devices are provided for the connection of dust extraction and collection facilities, ensure these are connected and properly used.**
Use of dust collection can reduce dust-related hazards.
h. **Do not let familiarity gained from frequent use of tools allow you to become complacent and ignore tool safety principles.** A careless action can cause severe injury within a fraction of a second.

4. **Power tool use and care**
a. **Do not force the power tool. Use the correct power tool for your application.**
The correct power tool will do the job better and safer at the rate for which it was designed.
b. **Do not use the power tool if the switch does not turn it on and off.** Any power tool that cannot be controlled with the switch is dangerous and must be repaired.
c. **Disconnect the plug from the power source and/or the battery pack from the power tool before making any adjustments, changing accessories, or storing power tools.** Such preventive safety measures reduce the risk of starting the power tool accidentally.
d. **Store idle power tools out of the reach of children and do not allow persons unfamiliar with the power tool or these instructions to operate the power tool.**
Power tools are dangerous in the hands of untrained users.
e. **Maintain power tools and accessories. Check for misalignment or binding of moving parts, breakage of parts and any other condition that may affect the power tools operation. If damaged, have the power tool repaired before use.** Many accidents are caused by poorly maintained power tools.
f. **Keep cutting tools sharp and clean.** Properly maintained cutting tools with sharp cutting edges are less likely to bind and are easier to control.
g. **Use the power tool, accessories and tool bits etc. in accordance with these instructions, taking into account the working conditions and the work to be performed.**
Use of the power tool for operations different from those intended could result in a hazardous situation.
h. **Keep handles and grasping surfaces dry, clean and free from oil and grease.** Slippery handles and grasping surfaces do not allow for safe handling and control of the tool in unexpected situations.

5. **Battery tool use and care**
a. **Recharge only with the charger specified by the manufacturer.** A charger that is suitable for one type of battery pack may create a risk of fire when used with another battery pack.
b. **Use power tools only with specifically designated battery packs.** Use of any other battery packs may create a risk of injury and fire.
c. **When battery pack is not in use, keep it away from other metal objects, like paper clips, coins, keys, nails, screws, or other small metal objects, that can make a connection from one terminal to another.**
Shorting the battery terminals together may cause burns or a fire.
d. **Do not use a battery pack or tool that is damaged or modified.** Damaged or modified batteries may exhibit unpredictable behaviour resulting in fire, explosion or risk of injury.
e. **Do not expose a battery pack or tool to fire or excessive temperature.** Exposure to fire or temperature above 130 °C may cause explosion.
f. **Follow all charging instructions and do not charge the battery pack or tool outside the temperature range specified in the instructions.** Charging improperly or at temperatures outside the specified range may damage the battery and increase the risk of fire.
g. **Under abusive conditions, liquid may be ejected from the battery; avoid contact. If contact accidentally occurs, flush with water. If liquid contacts eyes, additionally seek medical help.** Liquid ejected from the battery may cause irritation or burns.

6. **Service**
a. **Never service damaged battery packs.** Service of battery packs should only be performed by the manufacturer or authorized service providers.
b. **Have your power tool serviced by a qualified repair person using only identical replacement parts.**
This will ensure that the safety of the power tool is maintained.

Additional power tool safety warnings

Warning! Additional safety warnings for grinding, sanding, wire brushing, polishing or abrasive cutting-off operations.

- **This power tool is intended to function as a grinder, wire brush or cut-off tool. Read all safety warnings, instructions, illustrations and specifications provided with this power tool.** Failure to follow all instructions listed below may result in electric shock, fire and/or serious injury.
- **Operations such as polishing, sanding or hole cutting are not to be performed with this power tool.** Operations for which the power tool was not designed may create a hazard and cause personal injury.
- **Do not convert this power tool to operate in a way which is not specifically designed and specified by the tool manufacturer.**

Such a conversion may result in a loss of control and cause serious personal injury.

- **Do not use accessories which are not specifically designed and recommended by the tool manufacturer.** Just because the accessory can be attached to your power tool, it does not assure safe operation.
- **The rated speed of the accessory must be at least equal to the maximum speed marked on the power tool.** Accessories running faster than their rated speed can break and fly apart
- **The outside diameter and the thickness of your accessory must be within the capacity rating of your power tool.** Incorrectly sized accessories cannot be adequately guarded or controlled.
- **The dimensions of the accessory mounting must fit the dimensions of the mounting hardware of the power tool.** Accessories that do not match the mounting hardware of the power tool will run out of balance, vibrate excessively and may cause loss of control.
- **Do not use a damaged accessory. Before each use inspect the accessory such as abrasive wheels for chips and cracks, backing pad for cracks, tear or excess wear, wire brush for loose or cracked wires. If power tool or accessory is dropped, inspect for damage or install an undamaged accessory. After inspecting and installing an accessory, position yourself and bystanders away from the plane of the rotating accessory and run the power tool at maximum no-load speed for one minute.** Damaged accessories will normally break apart during this test time.
- **Wear personal protective equipment. Depending on application, use face shield, safety goggles or safety glasses. As appropriate, wear dust mask, hearing protectors, gloves and workshop apron capable of stopping small abrasive or workpiece fragments.** The eye protection must be capable of stopping flying debris generated by various operations.
  The dust mask or respirator must be capable of filtering particles generated by your operation. Prolonged exposure to high intensity noise may cause hearing loss.
- **Keep bystanders a safe distance away from work area. Anyone entering the work area must wear personal protective equipment.** Fragments of workpiece or of a broken accessory may fly away and cause injury beyond immediate area of operation.
- **Hold power tool by insulated gripping surfaces only, when performing an operation where the cutting accessory may contact hidden wiring or its own cord.** Cutting accessory contacting a "live" wire may make exposed metal parts of the power tool "live" and could give the operator an electric shock.
- **Never lay the power tool down until the accessory has come to a complete stop.** The spinning accessory may grab the surface and pull the power tool out of your control.
- **Do not run the power tool while carrying it at your side.** Accidental contact with the spinning accessory could snag your clothing, pulling the accessory into your body.
- **Regularly clean the power tool's air vents.** The motor's fan will draw the dust inside the housing and excessive accumulation of powdered metal may cause electrical hazards.
- **Do not operate the power tool near flammable materials.** Sparks could ignite these materials.
- **Do not use accessories that require liquid coolants.** Using water or other liquid coolants may result in electrocution or shock.

Kickback and related warnings

Kickback is a sudden reaction to a pinched or snagged rotating wheel, backing pad, brush or any other accessory. Pinching or snagging causes rapid stalling of the rotating accessory which in turn causes the uncontrolled power tool to be forced in the direction opposite of the accessory's rotation at the point of the binding.

For example, if an abrasive wheel is snagged or pinched by the workpiece, the edge of the wheel that is entering into the pinch point can dig into the surface of the material causing the wheel to climb out or kick out. The wheel may either jump toward or away from the operator, depending on direction of the wheel's movement at the point of pinching. Abrasive wheels may also break under these conditions.

Kickback is the result of power tool misuse and/or incorrect operating procedures or conditions and can be avoided by taking proper precautions as given below.

- **Maintain a firm grip on the power tool and position your body and arm to allow you to resist kickback forces. Always use auxiliary handle, if provided, for maximum control over kickback or torque reaction during start-up.**
  The operator can control torque reactions or kickback forces, if proper precautions are taken.
- **Never place your hand near the rotating accessory.** Accessory may kickback over your hand.
- **Do not position your body in the area where power tool will move if kickback occurs.** Kickback will propel the tool in direction opposite to the wheel's movement at the point of snagging.
- **Use special care when working corners, sharp edges etc. Avoid bouncing and snagging the accessory.** Corners, sharp edges or bouncing have a tendency to snag the rotating accessory and cause loss of control or kickback.

- **Do not attach a saw chain woodcarving blade or toothed saw blade.** Such blades create frequent kickback and loss of control.

Safety Warnings Specific for Grinding and Abrasive Cutting-Off Operations:

- **Use only wheel types that are recommended for your power tool and the specific guard designed for the selected wheel.** Wheels for which the power tool was not designed cannot be adequately guarded and are unsafe.
- **The grinding surface of centre depressed wheels must be mounted below the plane of the guard lip.** An improperly mounted wheel that projects through the plane of the guard lip cannot be adequately protected.
- **The guard must be securely attached to the power tool and positioned for maximum safety, so the least amount of wheel is exposed towards the operator.** The guard helps to protect operator from broken wheel fragments, accidental contact with wheel and sparks that could ignite clothing.
- **Wheels must be used only for recommended applications. For example: do not grind with the side of cut-off wheel.** Abrasive cut-off wheels are intended for peripheral grinding, side forces applied to these wheels may cause them to shatter.
- **Always use undamaged wheel flanges that are of correct size and shape for your selected wheel.** Proper wheel flanges support the wheel thus reducing the posibility of wheel breakage. Flanges for cut-off wheels may be different from grinding wheel flanges.
- **Do not use worn down wheels from larger power tools.** Wheel intended for larger power tool is not suitable for the higher speed of a smaller tool and may burst.
- **When using dual purpose wheels always use the correct guard for the application being performed.** Failure to use the correct guard may not provide the desired level of guarding, which could lead to serious injury.

Additional safety warnings specific for abrasive cutting-off operations

- **Do not "jam" the cut-off wheel or apply excessive pressure. Do not attempt to make an excessive depth of cut.**
  Over stressing the wheel increases the loading and susceptibility to twisting or binding of the wheel in the cut and the possibility of kickback or wheel breakage.
- **Do not position your body in line with and behind the rotating wheel.** When the wheel, at the point of operation, is moving away from your body, the possible kickback may propel the spinning wheel and the power tool directly at you.
- **When wheel is binding or when interrupting a cut for any reason, switch off the power tool and hold the power tool motionless until the wheel comes to a complete stop. Never attempt to remove the cut-off wheel from the cut while the wheel is in motion otherwise kickback may occur.** Investigate and take corrective action to eliminate the cause of wheel binding.
- **Do not restart the cutting operation in the workpiece. Let the wheel reach full speed and carefully re-enter the cut.** The wheel may bind, walk up or kickback if the power tool is restarted in the workpiece.
- **Support panels or any oversized workpiece to minimise the risk of wheel pinching and kickback.** Large workpieces tend to sag under their own weight. Supports must be placed under the workpiece near the line of cut and near the edge of the workpiece on both sides of the wheel.
- **Use extra caution when making a "pocket cut" into existing walls or other blind areas.** The protruding wheel may cut gas or water pipes, electrical wiring or objects that can cause kickback.
- **Do not attempt to do curved cutting.** Overstressing the wheel increases the loading and susceptibility to twisting or binding of the wheel in the cut and the possibility of kickback or wheel breakage, which can lead to serious injury.

Safety warnings specific for wire brushing opertions

- **Be aware that wire bristles are thrown by the brush even during ordinary operation. Do not overstress the wires by applying excessive load to the brush.** The wire bristles can easily penetrate light clothing and/or skin.
- **If the use of a guard is recommended for wire brushing, do not allow any interference of the wire wheel or brush with the guard.**
  Wire wheel or brush may expand in diameter due to work load and centrifugal forces.

Warning! Contact with or inhalation of dusts arising from sanding applications may endanger the health of the operator and possible bystanders. Wear a dust mask specifically designed for protection against dust and fumes and ensure that persons within or entering the work area are also protected.

Safety of others

- This tool can be used by children aged from 8 years and above and persons with reduced physical, sensory or mental capabilities or lack of experience and knowledge if they have been given supervision or instruction concerning use of the appliance in a safe way and understand the hazards involved.

- Children shall not play with the appliance. Cleaning and user maintenance shall not be made by children without supervision.

Residual risks

Additional residual risks may arise when using the tool which may not be included in the enclosed safety warnings. These risks can arise from misuse, prolonged use etc.
Even with the application of the relevant safety regulations and the implementation of safety devices, certain residual risks can not be avoided. These include:

- Injuries caused by touching any rotating/moving parts.
- Injuries caused when changing any parts, blades or accessories.
- Injuries caused by prolonged use of a tool. When using any tool for prolonged periods ensure you take regular breaks.
- Impairment of hearing.
- Health hazards caused by breathing dust developed when using your tool (example: working with wood, especially oak, beech and MDF.)

Noise and vibration

The declared noise and vibration emission values stated in the technical data and the declaration of conformity have been measured in accordance with a standard test method provided by EN 62841 and may be used for comparing one tool with another.
The declared noise and vibration emission value may also be used in a preliminary assessment of exposure.
Warning! The noise and vibration emission value during actual use of the power tool can differ from the declared value depending on the ways in which the tool is used. The noise and vibration level may increase above the level stated.
When assessing vibration exposure to determine safety measures required by 2002/44/EC to protect persons regularly using power tools in employment, an estimation of vibration exposure should consider, the actual conditions of use and the way the tool is used, including taking account of all parts of the operating cycle such as the times when the tool is switched off and when it is running idle in addition to the trigger time.
Warning! Grinding thin sheets of metal or other easily vibrating structures with a large surface can result in a total noise emission much higher (up to 15 dB) than the declared noise emission values. Such workpieces should as far as possible be prevented from emitting sound by suitable measures such as the application of heavy flexible damping mats. The increased noise emission is also to be considered for both the risk assessment of noise exposure and selecting adequate hearing protection.

Labels on tool

The following symbols are shown on the tool along with the date code:

Warning! To reduce the risk of injury, the user must read the instruction manual.

Wear safety glasses or goggles when operating this tool.

Wear ear protection when operating this tool.

Always operate with two hands.

Do not use the guard for cut-off operations.

Additional safety instructions for batteries and chargers

Batteries

- Never attempt to open for any reason.
- Do not expose the battery to water.
- Do not store in locations where the temperature may exceed 40 °C.
- Charge only at ambient temperatures between 10 °C and 40 °C.
- Charge only using the charger provided with the tool.
- When disposing of batteries, follow the instructions given in the section "Protecting the environment".

Do not attempt to charge damaged batteries.

Chargers

- Use your STANLEY FATMAX charger only to charge the battery in the tool with which it was supplied.
  Other batteries could burst, causing personal injury and damage.
- Never attempt to charge non-rechargeable batteries.
- Have defective cords replaced immediately.
- Do not expose the charger to water.
- Do not open the charger.
- Do not probe the charger.

The charger is intended for indoor use only.

Read the instruction manual before use.

Electrical safety

Your charger is double insulated; therefore no earth wire is required. Always check that the mains voltage corresponds to the voltage on the rating plate. Never attempt to replace the charger unit with a regular mains plug.

- If the supply cord is damaged, it must be replaced by the manufacturer or an authorised STANLEY FATMAX Service Centre in order to avoid a hazard.

Features

This appliance includes some or all of the following features.

1. Lock off switch
2. Trigger switch
3. Side handle
4. Spindle lock
5. Grinding guard
6. Grinding disc
7. Battery
8. Two pin spanner

Use

Warning! Let the tool work at its own pace. Do not overload.

- Be prepared for a stream of sparks when the grinding or cutting disc touches the workpiece.
- Always position the tool in such a way that the guard provides optimum protection from the grinding or cutting disc.

Charging the battery (Fig. A)

The battery needs to be charged before first use and whenever it fails to produce sufficient power on jobs that were easily done before.
The battery may become warm while charging; this is normal and does not indicate a problem.
Warning! Do not charge the battery at ambient temperatures below 10 °C or above 40 °C.
Recommended charging temperature: approx. 24 °C.
Note: The charger will not charge a battery if the cell temperature is below approximately 10 °C or above 40 °C. The battery should be left in the charger and the charger will begin to charge automatically when the cell temperature warms up or cools down.
Note: To ensure maximum performance and life of lithium-ion battery packs, charge the battery pack fully before first use.

- Plug the charger (9) into an appropriate outlet before inserting battery pack (7).
- The green charging light (9a) will blink continuously indicating that the charging process has started.
- The completion of charge will be indicated by the green charging light (9a) remaining ON continuously. The battery pack (7) is fully charged and may be removed and used at this time or left in the charger (9).
- Charge discharged batteries within 1 week. Battery life will be greatly diminished if stored in a discharged state.

Charger LED Modes

	Charging: Green LED Intermittent	
	Fully Charged: Green LED Solid	
	Hot/Cold Pack Delay: Green LED Intermittent Red LED Solid	

Note: The compatible charger(s) will not charge a faulty battery pack. The charger will indicate a faulty battery pack by refusing to light.
Note: This could also mean a problem with a charger.
If the charger indicates a problem, take the charger and battery pack to be tested at an authorized service centre.

Leaving the battery in the charger

The charger and battery pack can be left connected with the LED glowing indefinitely. The charger will keep the battery pack fresh and fully charged.

Hot/Cold Pack Delay

When the charger detects a battery that is too hot or too cold, it automatically starts a Hot/Cold Pack Delay, the green LED (9a) will flash intermittently, while the red LED (9b) will remain on continuously, suspending charging until the battery has reached an appropriate temperature. The charger then automatically switches to the pack charging mode.
This feature ensures maximum battery life.

Battery state of charge indicator (Fig. B)

The battery includes a state of charge indicator to quickly determine the extent of battery life as shown in figure B.
By pressing the state of charge button (7a) you can easily view the charge remaining in the battery as illustrated in figure B.

Installing and Removing the Battery Pack from the tool

Warning! Make certain the lock-off button is engaged to prevent switch actuation before removing or installing battery.

To install battery pack (Fig. C)

- Insert battery pack firmly into tool until an audible click is heard as shown in figure C. Ensure battery pack is fully seated and fully latched into position.

To remove battery pack (Fig. D)

- Depress the battery release button (7b) as shown in figure D and pull battery pack out of tool.

Storage hook (Optional extra) (Fig. E)

Warning! To reduce the risk of serious personal injury, place the forward/reverse button in the lock-off position or turn tool off and disconnect battery pack before making any adjustments or removing/installing attachments or accessories.
An accidental start-up can cause injury.
Warning! To reduce the risk of serious personal injury, ensure the screw (11) holding the storage hook is secure.
Note: When attaching or replacing the storage hook (10), use only the screw (11) that is provided. Be sure to securely tighten the screw.
If the hook is not desired at all, it can be removed from the tool. To move the storage hook, remove the screw (11) that holds the storage hook (10) in place.
Note: Various trackwall hooks and storage configurations are available. Please visit our website **www.stanley.eu/3** for further information.

Fitting and removing the guard (Fig. F, G)
The tool is supplied with a guard intended for grinding purposes and cutting purposes.
Ensure you use the correct guard specific for the intended operation. If the unit is intended to perform cutting off operations, a guard (17, Fig F; 5, Fig F) specific for this operation must be fitted.

Fitting

- Place the tool on a table, with the spindle (12) facing up.
- Release the clamping lock (13) and hold the guard (5) over the tool as shown.
- Align the lugs (14) with the notches (15).
- Press the guard down and rotate it counterclockwise to the required position.
- Fasten the clamping lock (13) to secure the guard to the tool.
- If required, tighten the screw (16) to increase the clamping force.

Removing

- Release the clamping lock (13).
- Rotate the guard clockwise to align the lugs (14) with the notches (15).
- Remove the guard from the tool.

Warning! Never use the tool without the guard.

Switching on and off

- To switch on, slide the lock off switch (1) forward then press and hold the trigger switch (2).
- To switch off, release the trigger switch (2).

Warning! Do not switch the tool on or off while under load.
Warning! Always slide the lock off switch (1) backwards to the locked position when the tool is not in use.

Hints for optimum use

- Firmly hold the tool with one hand around the side handle and the other hand around the main handle.

Guards

CAUTION: Guards must be used with all grinding wheels, cutting wheels, sanding flap discs, wire brushes. The tool may be used without a guard only when sanding with conventional sanding discs. Some applications may require purchasing the correct guard from your local dealer or authorised service centre.
CAUTION: When using a Type A (cut-off) wheel guard for facial grinding, the wheel guard may interfere with the workpiece causing poor control.
CAUTION: When using a Type A (cut-off) or Type C (combination) wheel guard for cutting-off and facial operations in concrete or masonry, there is an increased risk of exposure to dust and loss of control resulting in kickback.

Surface grinding with grinding wheels

- Allow the tool to reach full speed before touching the tool to the work surface.
- Apply minimum pressure to the work surface, allowing the tool to operate at high speed. Grinding rate is greatest when the tool operates at high speed.
- Maintain a 20˚ to 30˚ angle between the tool and work surface.
- Continuously move the tool in a forward and back motion to avoid creating gouges in the work surface.
- Remove the tool from work surface before turning tool off. Allow the tool to stop rotating before laying it down.

Edge grinding with grinding wheels

Wheels used for cutting and edge grinding may break or kick back if they bend or twist while the tool is being used to do cut-off work or deep grinding. To reduce the risk of serious injury, limit the use of these wheels with a standard Type C guard to shallow cutting and notching (less than 1/2 inch (13mm) in depth). The open side of the guard must be positioned away from the operator.
For deeper cutting with a Type 1 cut-off wheel, use a closed Type A or Tpe C guard.

- Allow the tool to reach full speed before touching the tool to the work surface.

- Apply minimum pressure to the work surface, allowing the tool to operate at high speed. Grinding rate is greatest when the tool operates at high speed.
- Position yourself so that the open-underside of the wheel is facing away from you.
- Once a cut is begun and a notch is established in the workpiece, do not change the angle of the cut. Changing the angle will cause the wheel to bend and may cause wheel breakage. Edge grinding wheels are not designed to withstand side pressures caused by bending.
- Remove the tool from the work surface before turning the tool off. Allow the tool to stop rotating before laying it down.

Do not use edge grinding/cutting wheels for surface grinding applications because these wheels are not designed for side pressures encountered with surface grinding. Wheel breakage and injury may result.

Surface finishing with sanding flap discs

- Allow the tool to reach full speed before touching the tool to the work surface.
- Apply minimum pressure to work surface, allowing the tool to operate at high speed. Sanding rate is greatest when the tool operates at high speed.
- Maintain a 5˚ to 10˚ angle between the tool and work surface.
- Continuously move the tool in a forward and back motion to avoid creating gouges in the work surface.
- Remove the tool from work surface before turning tool off. Allow the tool to stop rotating before laying it down.

Using sanding backing pads

Choose the proper grit sanding discs for your application. Sanding discs are available in various grits. Coarse grits yield faster material removal rates and a rougher finish.
Finer grits yield slower material removal and a smoother finish. Begin with coarse grit discs for fast, rough material removal. Move to a medium grit paper and finish with a fine grit disc for optimal finish.

- Coarse 16 - 30 grit
- Medium 36 - 80 grit
- Fine Finishing 100 - 120 grit
- Very Fine Finishing 150 - 180 grit

- Allow the tool to reach full speed before touching tool to the work surface.
- Apply minimum pressure to work surface, allowing the tool to operate at high speed. Sanding rate is greatest when the tool operates at high speed.
- Maintain a 5˚ to 15˚ angle between the tool and work surface. The sanding disc should contact approximately one inch (25mm) of work surface.
- Move the tool constantly in a straight line to prevent burning and swirling of work surface. Allowing the tool to rest on the work surface without moving, or moving the tool in a circular motion causes burning and swirling marks on the work surface.
- Remove the tool from work surface before turning tool off. Allow the tool to stop rotating before laying it down.

Using wire cup brushes and wire wheels

Wire wheels and brushes can be used for removing rust, scale and paint, and for smoothing irregular surfaces.
Note: The same precautions should be taken when wire brushng paint as when sanding paint.

- Allow the tool to reach full speed before touching the tool to the work surface.
- Apply minimum pressure to work surface, allowing the tool to operate at high speed. Material removal rate is greatest when the tool operates at high speed.
- Maintain a 5˚ to 10˚ angle between the tool and work surface for wire cup brushes.
- Maintain contact between the edge of the wheel and the work surface with wire wheels.
- Continuously move the tool in a forward and back motion to avoid creating gouges in the work surface. Allowing the tool to rest on the work surface without moving, or moving the tool in a circular motion causes burning and swirling marks on the work surface.
- Remove the tool from the work surface before turning the tool off. Allow the tool to stop rotating before setting it down.

Use extra care when working over an edge, as a sudden sharp movement of grinder may be experienced.

Precautions to take when sanding or wire brushing paint

- Sanding of lead based paint is NOT RECOMMENDED due to the difficulty of controlling the contaminated dust. The greatest danger of lead poisoning is to children and pregnant women.
- Since it is difficult to identify whether or not a paint contains lead without a chemical analysis, we recommend the following precautions when sanding any paint:

Personal safety

- No children or pregnant women should enter the work area where the paint sanding is being done until all clean up is completed.
- A dust mask or respirator should be worn by all persons entering the work area. The filter should be replaced daily or whenever the wearer has difficulty breathing.

Note: Only those dust masks suitable for working with lead paint dust and fumes should be used. Ordinary painting masks do not offer this protection. See your local hardware dealer for the proper respiratory protection.

- NO EATING, DRINKING or SMOKING should be done in the work area to prevent ingesting contaminated paint particles. Workers should wash and clean up BEFORE eating, drinking or smoking. Articles of food, drink, or smoking should not be left in the work area where dust would settle on them.

Optional accessories

Warning! Since accessories, other than those offered by STANLEY FATMAX, have not been tested with this product, use of such accessories with this product could be hazardous. To reduce the risk of injury, only STANLEY FATMAX recommended accessories should be used with this product.

Warning! Do not use a bonded abrasive wheel that is past its expiration (EXP) date as marked near center of wheel, if provided. Expired wheels are more likely to burst and cause serious injury. Store bonded abrasive wheels in dry location without temperature or humidity extremes. Destroy expired or damaged wheels so they cannot be used.

Recommended accessories for use with your product are available at extra cost from your local dealer or authorized service center.

If you need assistance in locating any accessory, please contact STANLEY. It is important to choose the correct guards, backing pads and flanges to use with grinder accessories. Refer to the Accessories Chart for information on choosing the correct accessories.

Warning! Accessories must be rated for at least the speed recommended on the tool warning label. Wheels and other accessories running over their rated accessory speed may fly apart and cause injury.

Use only the accessories shown in the Accessories Chart of this manual. Accessory ratings must always be above tool speed as shown on tool nameplate.

Warning! Handle and store all abrasive wheels carefully to prevent damage from thermal shock, heat, mechanical damage, etc. Store in a dry protected area free from high humidity, freezing temperatures or extreme temperature changes.

Environmental safety

- Paint should be removed in such a manner as to minimize the amount of dust generated.
- Areas where paint removal is occurring should be sealed with plastic sheeting of 4 mils thickness.
- Sanding should be done in a manner to reduce tracking of paint dust outside the work area.

Cleaning and disposal

- All surfaces in the work area should be vacuumed and thoroughly cleaned daily for the duration of the sanding project. Vacuum filter bags should be changed frequently.
- Plastic drop cloths should be gathered up and disposed of along with any dust chips or other removal debris. They should be placed in sealed refuse receptacles and disposed of through regular trash pick-up procedures. During clean up, children and pregnant women should be kept away from the immediate work area.
- All toys, washable furniture and utensils used by children should be washed thoroughly before being used again.

Using cutting wheels

Do not use edge grinding/cutting wheels for surface grinding applications because these wheels are not designed for side pressures encountered with surface grinding.

Wheel breakage and injury may result.

- Allow tool to reach full speed before touching tool to work surface.
- Apply minimum pressure to work surface, allowing tool to operate at high speed. Cutting rate is greatest when the tool operates at high speed.
- Once a cut is begun and a notch is established in the workpiece, do not change the angle of the cut. Changing the angle will cause the wheel to bend and may cause wheel breakage.
- Remove the tool from work surface before turning tool off. Allow the tool to stop rotating before setting it down.

Maintenance

Your STANLEY FATMAX tool has been designed to operate over a long period of time with a minimum of maintenance. Continuous satisfactory operation depends upon proper tool care and regular cleaning.

Your charger does not require any maintenance apart from regular cleaning.

Warning! Before performing any maintenance on corded/cordless power tools:

- Switch off and unplug the appliance/tool.
- Or switch off and remove the battery from the appliance/tool if the appliance/tool has a separate battery pack.
- Or run the battery down completely if it is integral and then switch off.
- Unplug the charger before cleaning it. Your charger does not require any maintenance apart from regular cleaning.
- Regularly clean the ventilation slots in your appliance/tool/charger using a soft brush or dry cloth.
- Regularly clean the motor housing using a damp cloth. Do not use any abrasive or solvent-based cleaner.
- Regularly open the chuck and tap it to remove any dust from the interior (when fitted).

Protecting the environment

Separate collection. Products and batteries marked with this symbol must not be disposed of with normal household waste.

Products and batteries contain materials that can be recovered or recycled reducing the demand for raw materials.

Please recycle electrical products and batteries according to local provisions. Further information is available at **www.2helpU.com**.

Technical data

		SFMCG400 (Type 2)
Voltage	V_{DC}	18
Rated No-load speed	Min^{-1}	9000
Disc diameter	mm	125
Disc bore	mm	22
Max thickness of grinding disc	mm	6.4
Max thickness of cutting disc	mm	3.0
Max thickness of wheel type wire brush	mm	13
Spindle diameter		M14
Spindle length (with the inner flange fitted)	mm	14
Spindle length (without the inner flange fitted)	mm	19.5
Weight	kg	2.1 (without battery)

Charger		SFMCB11	SFMCB12	SFMCB14
Input Voltage	V_{AC}	230	230	230
Output Voltage	V_{DC}	18	18	18
Current	A	1.25	2	4

Battery		SFMCB201	SFMCB202	SFMCB204	SFMCB206
Voltage	V_{DC}	18	18	18	18
Capacity	Ah	1.5	2.0	4.0	6.0
Type		Li-Ion	Li-Ion	Li-Ion	Li-Ion

Level of sound pressure according to EN 62841:
Sound pressure (L_{pA}) 82 dB(A), uncertainty (K) 3 dB(A)
Sound power (L_{WA}) 90 dB(A), uncertainty (K) 3 dB(A)

Vibration total values (triax vector sum) according to EN 62841:
Surface grinding ($a_{h,AG}$) 4.7 m/s^2, uncertainty (K) 1.5 m/s^2 Cutting off ($a_{h,CO}$) 4.6 m/s^2 , uncertainty (K) 1.5 m/s^2

Caution! Applications such as cutting-off or wire brushing may have different vibration emissions.

EC declaration of conformity

MACHINERY DIRECTIVE

SFMCG400 - Cordless angle grinder
STANLEY Europe declares that these products described under Technical Data are in compliance with:2006/42/EC, EN 62841-1:2015+A11:2022; EN IEC 62841-2-3:2021+A11:2021.

These products also comply with Directive 2014/30/EU and 2011/65/EU. For more information, please contact Black & Decker at the following address or refer to the back of the manual.
For more information, please contact STANLEY FATMAX at the following address or refer to the back of the manual.
The undersigned is responsible for compilation of the technical file and makes this declaration on behalf of STANLEY FATMAX.

Patrick Diepenbach

Patrick Diepenbach
General Manager, Benelux
Stanley FatMax,Richard-Klinger-Strasse 11,
65510 Idstein,Germany
31.10.2023

Guarantee

STANLEY FATMAX is confident of the quality of its products and offers consumers a 12 month guarantee from the date of purchase.
This guarantee is in addition to and in no way prejudices your statutory rights.
The guarantee is valid within the territories of the Member States of the European Union and the European Free Trade Area and the United Kingdom.
To claim on the guarantee, the claim must be in accordance with STANLEY FATMAX Terms and Conditions and you will need to submit proof of purchase to the seller or an authorised repair agent. Terms and conditions of the STANLEY FATMAX 1 year guarantee and the location of your nearest authorised repair agent can be obtained on the Internet at **www.2helpU.com**, or by contacting your local STANLEY FATMAX office at the address indicated in this manual.
Please visit our website **www.stanley.eu/3** to register Please visit our website **www.stanley.eu/3** to register your new STANLEY FATMAX product and receive updates on new products and special offers.

Guard Type	Accessory	How to fit grinder
Type B guard Type C guard	Depressed centre grinding disc	Guard Unthreaded backing flange wheel Threaded locking flange
Type A guard Type C guard	Metal cutting disc, bonded	
Type A guard	Masonry cutting disc,bonded	
Type A guard Type B guard Type C guard	Wire wheels	
No guard	Wire cup with threaded nut without guard	Wire Brush

Additional Information for Guards and Accessories
≤10 mm **When using segmented diamond wheels, use only diamond wheels with a peripheral gap not greater than 10 mm and negative rake angle.**
DO NOT USE **segmented diamond wheels with a peripheral gap greater than 10 mm and/or a positive rake angle.**
≥2 mm **For all grinding, sanding, and wheel type wire brushing accessories, the lowest portion of the accessory must be contained within the guard enclosure with 2 mm or greater clearance to the bottom lip of guard.**

United Kingdom

Stanley Fat Max
Meadowfield Avenue
Spennymoor, DL16 6YJ

Tel. +44 (0)1753 511234
Fax +44 (0)1753 551155
www.stanleytools.co.uk